OWNER'S MANUAL

South Seas Spas

CERTIFICATE OF AUTHENTICITY

Thank you for your purchase. This certificate hereby verifies that the spa you have purchased from an Artesian Spas (May Manufacturing, LLC) authorized dealer is authentic, brand new and original. The spa has been crafted and built in the U.S.A in accordance with industry quality standards.

WARRANTY REGISTRATION

Please activate your warranty and register your spa at www.SouthSeasSpas.com click SUPPORT then "Click Here to Register Your Spa" or mail the registration card in the back of the Owner's Manual.

Spa Serial #_____

Spa Model:_____

Date Purchased:_____

Installation Date:_____

Dealer Name:_____

Telephone #:_____

PROUDLY MADE FOR THE WORLD IN THE USA

LIFETIME WARRANTY

TABLE OF CONTENTS

Certificate of Authenticity.....
Important Safety Instructions.....1
Electrical Requirements and Installation.....14
Codes and Compliance.....14
GFCI Requirements.....14
Electrical Disconnect.....15
Voltage Checks.....16
60 Hz 120VAC Wiring Schematic.....17
60 Hz 240VAC Wiring Schematic.....18
50 Hz Single/Dual/Three Phase.....19
Spa Start Up.....22
Selecting a Location.....22
Inspection.....23
Filling the Spa with Water.....23
Testing the GFCI Breaker.....24
VS/GS Series Control Operations.....25
Legend.....25
Temp/Set (80°F-104°F/26°C-40°C).....26
Light/Mode/Freeze Protection.....26
Light.....26
Mode.....26
Freeze Protection.....27
Jets/Preset Filter Cycles.....27
Jets.....27
Preset Filter Cycles.....27
Diagnostic Messages.....28
Maintaining Your Spa.....29
Pillow Care.....29
Jet Care.....29
Removing, Installing, and Cleaning Filters.....30
Winterizing Your Spa.....31
Replacing the Light Bulb.....31
Spa Cabinet Care.....31
Cleaning Your Spa Interior.....32
Cover Care.....32
Chemical Treatment of Water.....33

TABLE OF CONTENTS

Artesian South Seas Spas Warranty.....34

IMPORTANT SAFETY INSTRUCTIONS
IMPORTANTES CONSIGNES DE SÉCURITÉ

PLEASE TAKE THE TIME TO READ ALL OF THESE WARNINGS AND CAUTIONS PRIOR TO USING YOUR SPA.

PLEASE, be a responsible spa owner. When installing and using this spa, always adhere to basic safety precautions. Be sure to list emergency telephone numbers at the telephone nearest the spa, including physician, hospital, ambulance, police, and the fire department. Be certain to explain safety precautions to all new or occasional users of your spa. Remember, they may not be aware of the possible risks associated with the spa water temperature. Have at least one family member learn CPR (cardiopulmonary resuscitation). **IT COULD SAVE A LIFE!**

READ AND FOLLOW ALL INSTRUCTIONS

1. **WARNING -** To reduce the risk of injury, do not permit children to use this product unless they are closely supervised at all times.

2. A wire connector is provided on this unit to connect a minimum 8 AWG (8.4 mm) solid copper conductor between this unit and any metal equipment, metal enclosures of electrical equipment, metal water pipe, or conduit within 5 feet (1.5 m) of the unit.

PRIÈRE DE LIRE ATTENTIVEMENT TOUTES CES MISES EN GARDE AVANT D'UTILISER LE SPA.

VEUILLEZ agir de façon responsable en tant que propriétaire de spa. Lorsque vous installez et utilisez ce spa, veuillez prendre les précautions de sécurité de base en tout temps. Conservez près du spa une liste indiquant les numéros de téléphone d'urgence, notamment le médecin, l'hôpital, l'ambulance, la police et les pompiers. Veillez à expliquer les précautions de sécurité à tous ceux qui utilisent votre spa occasionnellement ou pour la première fois. Rappelez-vous qu'ils ne sont probablement pas au courant des risques inhérents à la température de l'eau du spa. Demandez à au moins un membre de la famille d'apprendre la réanimation cardiopulmonaire (RCP).
CELA POURRAIT SAUVER UNE VIE!

LIRE ET ADHÉRER À TOUTES LES CONSIGNES

1) MISE EN GARDE – Pour réduire le risque de blessure, ne pas laisser les enfants utiliser ce produit sans supervision constante.

2. Un raccordeur de fils est compris avec cet appareil afin de brancher un conducteur en cuivre massif d'au moins 8 AWG (8,4 mm) entre cet appareil et toute pièce d'équipement en métal, enveloppes métalliques d'équipement électrique, tuyau en métal ou canalisation à 5 pieds (1,5 m) ou moins de l'appareil.

3. For cord connected/convertible units. **DANGER - Risk of Injury -**

a) Replace damaged cord immediately.

b) Do not bury cord.

c) Connect to a grounded, grounding type receptacle only.

4. (For units with a GFCI)

WARNING - This product is provided with a ground-fault circuit interrupter (GFCI). The GFCI must be tested before each use. With the product operating, push the test button on the GFCI. The product should not operate. Now push the reset button on the GFCI. The product should now operate normally. When the product fails to operate in this manner, there is a ground current flowing indicating the possibility of an electric shock. Disconnect the power until the fault has been identified and corrected.

5. **DANGER - Risk of Accidental Drowning -** Extreme caution must be exercised to prevent unauthorized access by children. To avoid accidents, ensure that children cannot use this spa unless they are supervised at all times.

6. **DANGER - Risk of Injury -** The suction fittings in this area are sized to match the specific water flow created by the pump. Should the need arise to replace the suction fittings or the pump, be sure the flow rates are compatible.

Never operate spa if the suction fittings are broken or missing. Never replace a suction fitting with one rated less than the flow rate marked on the original suction fitting.

7. **DANGER - Risk of Electrical Shock -** Install at least 5 feet (1.5 m) from all metal surfaces. As an alternative, a spa may be within 5 feet of metal surfaces if each metal surface is permanently connected by a minimum 8 AWG (8.4 mm) solid copper conductor to the wire connector on the terminal box that is provided for this purpose.

3. Appareils convertibles/à cordon. **DANGER – Risque de blessure –**

a) Remplacer sans tarder le cordon endommagé.

b) Ne pas enterrer le cordon.

c) Raccorder à une mise à la terre.

4. (Pour les unités avec un GFCI)

AVERTISSEMENT - Ce produit est fourni avec un disjoncteur de fuite à la terre (GFCI). Le disjoncteur doit être testé avant chaque utilisation. Avec l'exploitation du produit, appuyez sur le bouton de test sur le disjoncteur. Le produit ne doit pas fonctionner. Maintenant appuyez sur le bouton de réinitialisation situé sur le disjoncteur. Le produit devrait maintenant fonctionner normalement. Lorsque le produit ne fonctionne pas de cette manière, il y a un courant qui circule au sol indiquant la possibilité d'un choc électrique. Débranchez le câble d'alimentation jusqu'à ce que l'anomalie a été identifiée et corrigée.

5. **DANGER – Risque de noyade accidentelle –** Faire preuve d'extrême prudence afin d'empêcher l'accès non autorisé aux enfants. Pour éviter tout accident, veiller à ce que les enfants ne puissent utiliser ce spa à moins d'être supervisés en tout temps.

6. **DANGER – Risque de blessure** – La taille des raccords de succion estdéterminée en fonction du débit d'eau spécifique de la pompe. Si les raccords de succion ou la pompe doivent être remplacés, veiller à ce que lesdébits d'eau soient compatibles.

Ne jamais faire fonctionner un spa si les raccords de succion sont endommagés ou manquants. Ne jamais remplacer un raccord de succion par un autre dont le débit d'eau est inférieur à celui indiqué sur le raccordde succion original.

7. **DANGER – Risque d'électrocution –** Installer à au moins 5 pieds (1,5 m) de toutes les surfaces en métal. Le spa peut également se trouver à moins de 5 pieds des surfaces en métal si chaque surface en métal est raccordée en permanence par un conducteur en cuivre massif d'au moins 8 AWG (8,4 mm) au raccordeur de fils du disjoncteur prévu à cette fin.

8. **DANGER - Risk of Electric Shock -** Do not permit any electrical appliance such as a light, telephone, radio, or television, within 5 feet (1.5m) of a spa.

9. **WARNING - To reduce the risk of injury**:

a) The water in a spa should never exceed 40ºC (104ºF). Water temperatures between 38ºC (100ºF) and 40ºC are considered safe for a healthy adult. Lower water temperatures are recommended for young children and when spa use exceeds 10 minutes.

b) Since excessive water temperatures have a high potential for causing fetal damage during the early months of pregnancy, pregnant or possibly pregnant women should limit spa water temperatures to 38ºC (100ºF).

c) Before entering a spa, the user should measure the water temperature.

d) The use of alcohol, drugs, or medication before or during spa use may lead to unconsciousness with the possibility of drowning.

e) Obese persons and persons with a history of heart disease, low or high blood pressure, circulatory system problems, or diabetes should consult a physician before using a spa.

f) Persons using medication should consult a physician before using a spa since some medication may induce drowsiness while other medication may affect heart rate, blood pressure, and circulation.

SAVE THESE INSTRUCTIONS

8. **DANGER – Risque d'électrocution** – Interdire tout appareil électrique tel qu'une lampe, un téléphone, une radio ou un téléviseur, à moins de 5 pieds (1,5 m) du spa.

9. **MISE EN GARDE – Pour atténuer le risque de blessure :**

a) La température de l'eau du spa ne doit jamais dépasser 40°C (104°F). L'eau dont la température varie entre 38°C (100°F) et 40°C (104°F) est jugée sécuritaire pour un adulte en bonne santé. Pour de jeunes enfants ou un usage d'une durée supérieure à 10 minutes, une température plus basse est conseillée.

b) Étant donné que l'eau très chaude peut causer des dommages au foetus durant les premiers mois de la grossesse, les femmes enceintes qui utilisent le spa doivent limiter la température à 38°C (100°F).

c) Avant d'entrer dans le spa, l'utilisateur doit vérifier la température de l'eau.

d) La consommation d'alcool, de drogues ou de médicaments avant ou pendant l'utilisation du spa peut causer une perte de conscience entraînant la noyade.

e) Les personnes obèses ainsi que celles qui ont des problèmes cardiaques, une tension artérielle faible ou élevée, des problèmes de circulation sanguine, ou qui souffrent de diabète doivent consulter un médecin avant d'utiliser le spa.

f) Les personnes qui consomment des médicaments doivent consulter un médecin avant d'utiliser le spa, car certains médicaments peuvent favoriser la somnolence, et d'autres peuvent affecter le rythme cardiaque, la tension artérielle et la circulation sanguine.

CONSERVER CES CONSIGNES

IMPORTANT SAFETY INSTRUCTIONS
IMPORTANTES CONSIGNES DE SÉCURITÉ

EQUIPMENT ASSEMBLIES

An equipment assembly shall be additionally provided with the following important safety instructions

1. **WARNING** - Risk of accidental drowning. Extreme caution must be exercised to prevent unauthorized access by children, to avoid accidents, ensure that children cannot use a spa or hot tub unless they are closely supervised at all times.

2. **DANGER** - To reduce the risk of drowning from hair and body entrapment, install a suction fitting(s) with a marked flow rate that equals or exceeds the flow rate marked on the equipment assembly.

3. **DANGER** - To reduce the risk of injury, do not remove the suction fittings. Never operate a spa or hot tub if the suction fittings are broken or missing. Never replace a suction fitting with one rated less than the flow rate marked on the equipment assembly.

4. **DANGER**- Risk of Electric Shock. Do not permit any electric appliance, such as a light, telephone, radio, or television, within 5 feet (1.5m) of a spa or hot tub.

5. **WARNING** - Risk of Electric Shock. Install at least 5 feet (1.5m) from inside wall of hot tub or spa using non metallic plumbing.

6. **WARNING -** To `reduce the risk of injury:

a) The water in a spa should never exceed 40ºC (104ºF) Water temperatures between 38ºC (100ºF) and 40ºC are considered safe for a healthy adult. Lower water temperatures are recommended for young children and when spa use exceeds 10 minutes.

b) Since excessive water temperatures have a high potential for causing fetal damage during the early months of pregnancy, pregnant or possibly pregnant women should limit spa water temperatures to 38ºC (100ºF).

c) Before entering a spa or hot tub, the user should measure the water temperature since the tolerance of water temperature regulating devices varies.

d) The use of alcohol, drugs or medication before or during spa or hot tub use may lead to unconsciousness with the possibility of drowning.

MODES D'ASSEMBLAGE

Un mode d'assemblage doit également être fourni et comporter les consignes de sécurité suivantes :

1. **MISE EN GARDE –** Risque de noyade accidentelle. Faire preuve d'extrême prudence afin d'empêcher l'accès non autorisé aux enfants. Pour éviter tout accident, veiller à ce que les enfants ne puissent utiliser ce spa à moins d'être supervisés en tout temps.

2. **DANGER –** Pour atténuer le risque de noyade causée par la succion du corps et des cheveux, installer un ou des raccords de succion dont le débit d'eau indiqué est égal ou supérieur à celui qui est indiqué sur l'équipement.

3. **DANGER –** Pour atténuer le risque de blessure, ne pas retirer les raccords de succion. Ne jamais faire fonctionner un spa si les raccords de succion sont endommagés ou manquants. Ne jamais remplacer un raccord de succion par un autre dont le débit d'eau est inférieur à celui indiqué sur l'équipement.

4. **DANGER –** Risque d'électrocution. Ne pas laisser d'appareil électrique tel qu'une lampe, un téléphone, une radio ou un téléviseur, à moins de 5 pieds (1,5 m) du spa.

5**. MISE EN GARDE –** Risque d'électrocution. Installer au moins 5 pieds (1,5 m) de la paroi intérieure du spa avec de la tuyauterie non métallique.

6. **MISE EN GARDE –** Pour atténuer le risque de blessure :

a) La température de l'eau du spa ne doit jamais dépasser 40ºC (104ºF). L'eau dont la température varie entre 38ºC (100ºF) et 40ºC (104oF) est jugée sécuritaire pour un adulte en bonne santé. Pour de jeunes enfants ou un usage d'une durée supérieure à 10 minutes, une température plus basse est conseillée.

b) Étant donné que l'eau très chaude peut causer des dommages au foetus durant les premiers mois de la grossesse. Les femmes enceintes qui utilisent le spa doivent limiter la température à 38ºC (100ºF).

c) Avant d'entrer dans le spa, l'utilisateur doit vérifier la température de l'eau.

d) La consommation d'alcool, de drogues ou de médicaments avant ou pendant l'utilisation du spa peut causer une perte de conscience entraînant la noyade.

e) Obese persons and persons with a history of heart disease, low or high blood pressure, circulatory system problems, or diabetes should consult a physician before using a spa.

f) Persons using medication should consult a physician before using a spa or hot tub since some medication may induce drowsiness while other medication may affect heart rate, blood pressure and circulation.

7**. For equipment assemblies with a gas heater**

WARNING - Risk of suffocation. This equipment assembly uses a gas heater and is intended for outdoor use only unless proper ventilation can be provided for an indoor installation.

8. **For equipment assemblies with a blower**

WARNING - Install blower no less than 1 foot (305mm) above the maximum water level to prevent water from contacting electrical equipment.

SAVE THESE INSTRUCTIONS

e) Les personnes obèses ainsi que celles qui ont des problèmes cardiaques, une tension artérielle faible ou élevée, des problèmes de circulation sanguine, ou qui souffrent de diabète doivent consulter un médecin avant d'utiliser le spa.

f) Les personnes qui consomment des médicaments doivent consulter un médecin avant d'utiliser le spa, car certains médicaments peuvent favoriser la somnolence, et d'autres peuvent affecter le rythme cardiaque, la tension artérielle et la circulation sanguine.

7. **Équipement comportant un chauffe-eau à gaz**

IMPORTANTES CONSIGNES DE SÉCURITÉ MISE EN GARDE – Risque de suffocation. Cet équipement comporte un chauffe-eau à gaz conçu pour un usage à l'extérieur seulement, à moins qu'une ventilation adéquate soit fournie pour une installation à l'intérieur.

8. **Équipement comportant une soufflante**

MISE EN GARDE – Installer une soufflante au moins 1 pied (305 mm) au-dessus du niveau de l'eau maximum pour empêcher l'eau d'éclabousser l'équipement électrique.

CONSERVER CES CONSIGNES

IMPORTANT SAFETY INSTRUCTIONS
IMPORTANTES CONSIGNES DE SÉCURITÉ

Marking for equipment assemblies

⚠ WARNING

REDUCE THE RISK OF ELECTROCUTION

1. Install at least 5 feet from water using nonmettalic plumbing.
2. Do not install under spa skirt or within an enclosure that would restrict ventilation.
3. If blower is included, install at least 1 foot above maximum water level.

REDUCE THE RISK OF CHILD DROWING

1. Supervise children at all times.
2. Attach spa cover after each use.
3. Install a suction guard with marked flow rate no less than 170 GPM to avoid hair and body entrapment.

REDUCE THE RISK OF OVERHEATING

1. Check with a doctor before use if pregnant, diabetic, in poor health, or under medical care.
2. Exit immediately if uncomfortabe, dizzy or sleepy. Spa heat can cause hyperthermia and unconsciousness.
3. Spa heat in conjunction with alcohol, drugs, or medication can cause unconsciousness.

WHEN PREGNANT, soaking in hot water for long periods can harm your fetus. Measure water temperature before entering.

1. Do not enter spa if water is hotter than 100ºF (38ºC).
2. Do not stay in spa for longer than 10 minutes.

AUDIO COMPONENT WARNINGS

Spas equipped with the Audio system should follow these guidelines for safety:

1. **CAUTION -** Risk of Electrical Shock - Do not leave compartment door open.

2. **CAUTION -** Risk of Electrical Shock - Replace components only with identical components.

IMPORTANT SAFETY INSTRUCTIONS
IMPORTANTES CONSIGNES DE SÉCURITÉ

Étiquette destinée aux modes d'assemblage

⚠ WARNING

RÉDUIRE LE RISQUE D'ÉLECTROCUTION
1. Installer à 5 pieds et plus de l'eau avec de la tuyauterie non métallique.
2. Ne pas installer sous la plinthe du spa ou dans une enceinte qui Limite la ventilation.
3. Si un soufflante est comprise, installer celle-ci au moins 1 pied audessus du niveau maximum de l'eau.

RÉDUIRE LA RISQUE DE NOYADE D'UN ENFANT
1. Superviser les enfants en tout temps.
2. Remettre la couverture du spa en place après chaque utilisation.
3. Poser un dispositif de protection contre la succion avec débit d'eau indiqué d'au moins 170 GPM pour éviter la succion du corps et des cheveux.

RÉDUIRE LE RISQUE DE SURCHAUFFE
1. Consulter un médecin avant usage si vous êtes enceinte, éprouvez des problèmes de santé ou suivez des traitements médicaux.
2. Quitter immédiatement le spa en cas d'inconfort, d'étourdissements ou de somnolence. La chaleur du spa peut causer de l'hyperthermie et la perte de conscience.
3. La chaleur du spa jumelée à l'alcool, aux drogues ou aux médicaments peut causer la perte de conscience.

DURANT LA GROSSESSE, le trempage prolongé peut nuire au foetus. Vérifier la température de l'eau avant d'y entrer.
1. Ne pas pénétrer dans le spa si la température de l'eau est supérieure à 100oF (38oC).
2. Ne pas rester dans le spa pendant plus de 10 minutes.

MISES EN GARDE SUR LES COMPOSANTES DU SYSTÈME DE SON

Les utilisateurs d'un spa doté d'un système de son doivent suivre ces consignes de sécurité :

1. **ATTENTION** – Risque d'électrocution – Ne pas laisser la porte du compartiment ouverte.

2. **ATTENTION** – Remplacer les composantes du système de son par des composantes identiques.

3. Do not operate the audio controls while inside the spa.

4. **WARNING - Prevent Electrocution -** Do not connect any auxiliary components (for example cable, additional speakers, headphones, additional audio/video components, etc.) to the system.

5. These units are not provided with an outdoor antennae; when provided, it should be installed in accordance with Article 810 of the National Electrical Code, ANSI/NFPA 70.

6. Do not service this product yourself as opening or removing covers may expose you to dangerous voltage or other risk of injury. Refer all servicing to qualified service personnel.

7. When the power supply connections or power supply cord(s) are damaged: if water is entering the audio/video compartment or any electrical equipment compartment area; if the protective shields or barriers are showing signs of deterioration; or if there are signs of other potential damage to the unit, turn off the unit and refer serviceing to qualified service personnel.

8. This unit should be subjected to periodic routine maintenance (for example, once every 3 months) to make sure that the unit is operating properly.

KEEP THESE SAFETY INSTRUCTIONS IN A CONVENIENT AND READILY ACCESSIBLE LOCATION!!

3. Ne pas utiliser les commandes audio lorsqu'on se trouve à l'intérieur du spa.

4. **MISE EN GARDE – Prévention du risque d'électrocution** – Ne pas raccorder les composantes auxiliaires (p. ex., câble, hautparleur supplémentaire, casque d'écoute, autres composantes audio/vidéo, etc.) au système.

5. Ces appareils ne comportent pas d'antenne extérieure; lorsque celle-ci est fournie, elle doit être installée conformément à l'article 810 du Code national de l'électricité, ANSI/NFPA 70.

6. Ne pas tenter de réparer le produit soi-même en ouvrant ou en retirant les couvercles, car cela peut exposer l'utilisateur à une tension dangereuse ou autre risque de blessure. Confier toute réparation à un technicien compétent.

7. Raccords d'alimentation ou les cordons d'alimentation endommagés : si l'eau pénètre dans le compartiment audio/vidéo ou tout compartiment de l'équipement électrique; si les écrans ou barrières de protection montrent des signes d'usure; ou si l'appareil semble endommagé, fermer l'appareil et appeler un technicien compétent.

8. Cet appareil doit être entretenu périodiquement (p. ex., tous les trois mois) pour s'assurer qu'il fonctionne adéquatement.

PRIÈRE DE CONSERVER CES CONSIGNES DE SÉCURITÉ DANS UN LIEU PRATIQUE ET FACILE D'ACCÈS!!

ELECTRICAL REQUIREMENTS AND INSTALLATION

The following information is provided for hooking up electrical supply to your new spa. A qualified, licensed, electrician must perform this work. Failure to follow these instructions will terminate all warranty coverage and can cause serious injury or death.

Your spa is preset at the factory to run on 240 V 60Hz with a 40 A input. This feature gives you the most performance out of your spa. This will require a 240 V, 50-amp Class A GFCI protected service. The single pump spa may also be setup to run off of 120 VAC, 60 Hz, 16/40A.

Codes and Compliance

North American 60 Hz	240 V/40 A*	240 V/50 A**	240 V60 A***
Voltage	240 VAC	240 VAC	240 VAC
Max Current Draw	26 A	40 A	48 A
Number of Wires	4	4	4
Circuit Breaker	40 A*	50 A**	60 A***

* In this configuration, the heater will not operate while any jet pump is running.

** In this configuration, the heater will not operate while more than 1 jet pumps are running.

*** In this configuration the heater will operate while all jets pumps are running.

All of the electrical wiring methods and materials used to complete the electrical installation of the control system must be in accordance with the National Electrical Code or the Canadian Electric Code, as well as any local electrical codes in effect at the time of installation.

The selection of electrical materials required to accomplish this installation and the installation of the control system must be accomplished by, or be under the direct supervision of, a qualified electrician.

The control is classified as a “continuous duty appliance” and is intended primarily for installation at a single family dwelling. The installation recommendations and instructions contained in this manual are directed solely toward these issues.

GFCI Requirements

A Ground-Fault Circuit Interrupter (GFCI) is required to be installed in the electrical supply circuit connected to these products. GFCI’s are ultra-sensitive switching devices, providing the ultimate in safety.

The most common style of GFCI also provides high-current protection as a circuit breaker.

One of the two configurations of GFCI's, as shown, will be required for your installation, depending upon the options selected.

Note: A 20 A GFCI power cord is included with a 120 VAC spa. This can be used for a cord-connected 120 V setup only, and only in place of a stand-alone GFCI. 120 V Set up must be on a dedicated 20 A service.

Electrical Disconnect

An electrical disconnect (sometimes referred to as a "local disconnect") is installed apart from the main service panel. The electrical disconnect must be installed where readily accessible and within sight of the spa, but at least 5' (1.5 meters) from the inside wall of the spa.

The disconnect must open all ungrounded conductors of the electrical supply connected to the spa.

If the main panel meets the sight-line and distance criteria, a GFCI circuit breaker installed in that panel may be used as the disconnect, as shown in Option A.

A new sub-panel must be installed to meet the sight-line requirements. Two possible arrangements exist (shown below).

1. The GFCI circuit breaker may be installed in the main panel, and a suitable switch, circuit breaker or other disconnecting device installed in the sub-panel (Option A).

2. The GFCI circuit breaker may be installed in the sub-panel, and a suitably rated circuit breaker (non-GFCI) installed in the main panel (Option B)

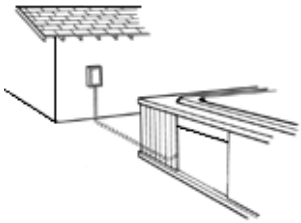

Service Disconnect
Option A

Servicice Disconnect
Option B

VOLTAGE CHECKS

Set voltmeter to AC Volts. Voltages should check out as follows:
Line 1 Black to Line 2 Red – 240 VAC (Range of acceptability: 216 VAC – 246 VAC)

Either Line to Neutral – 120 VAC (Range of acceptability: 108 VAC – 132 VAC)

Either Line to Ground – 120 VAC (Range of acceptability: 108 VAC – 132 VAC)

Neutral to Ground – 0 Volts

These readings should be consistent at all points in all electrical enclosures and breaker boxes. If the readings are not in the acceptable ranges, do not power up the system and call an electrician to evaluate the installation.

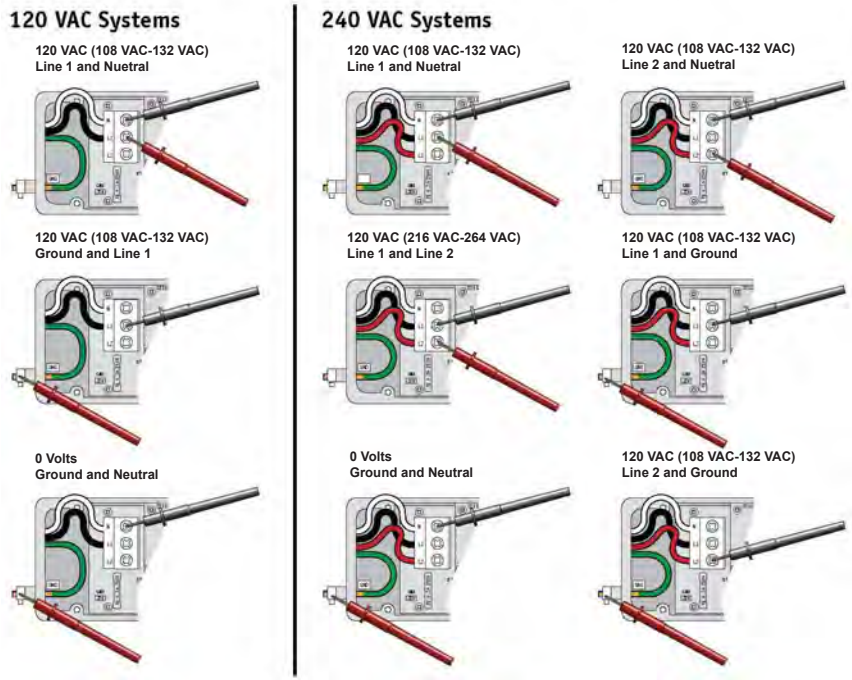

60 Hz SOUTH SEAS 120 VAC WIRING SCHEMATIC

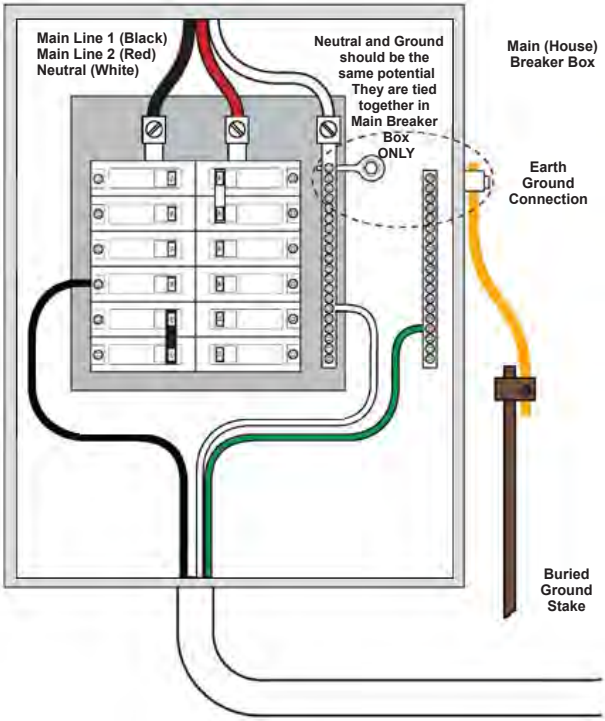

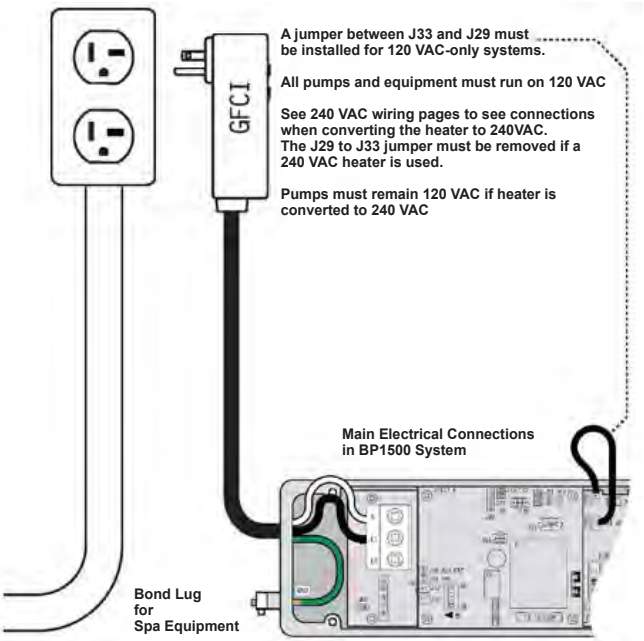

60 Hz SOUTH SEAS 240 VAC WIRING SCHEMATIC

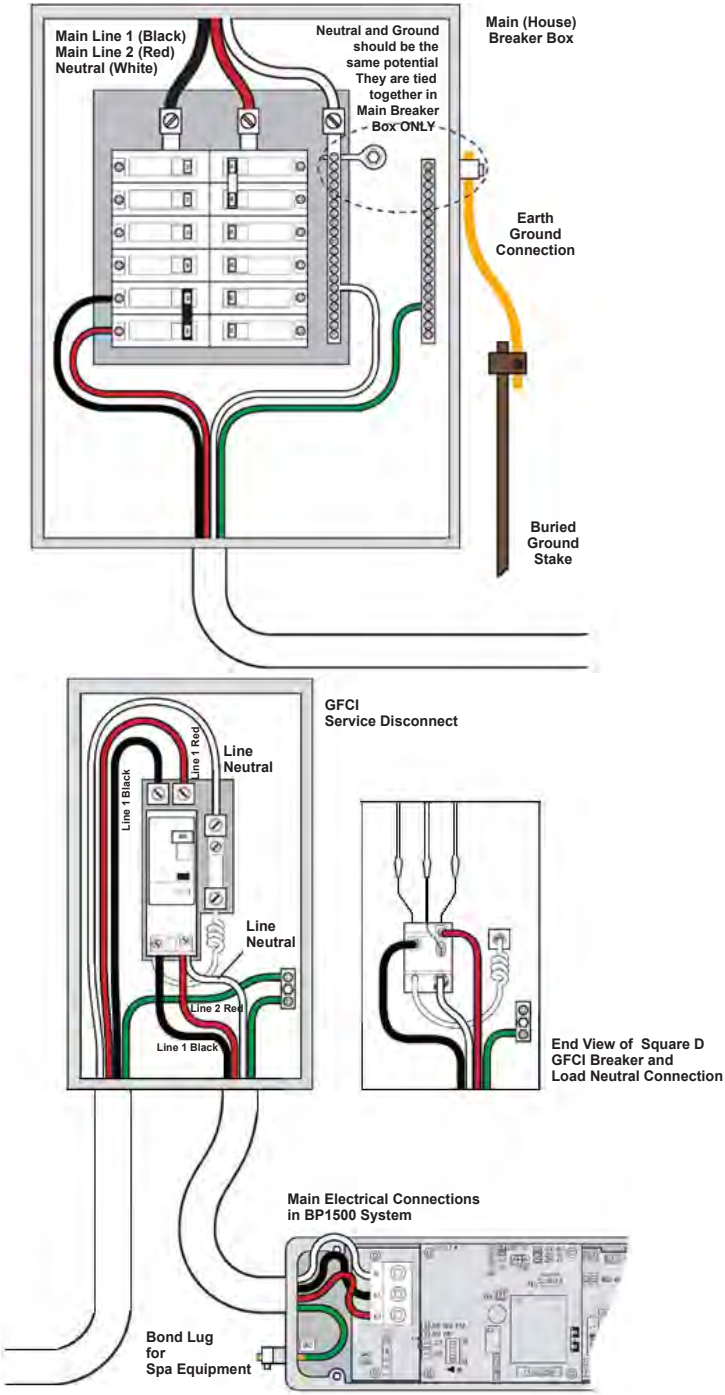

50 Hz SOUTH SEAS SINGLE/DUAL/THREE PHASE

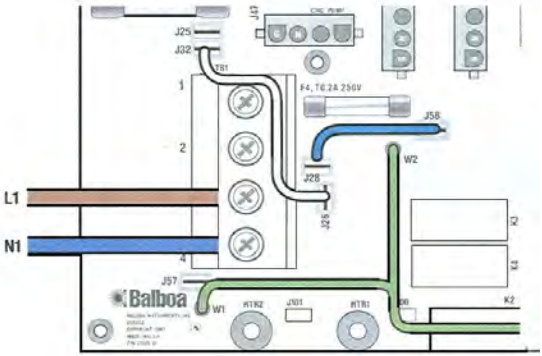

Single Service,
TN and TT
Electrical Systems
(1 X 16 Amp or 1 X 32 Amp)

3 Wires (1 Line + 1 Neutral + 1 Protective Earth)
Protective Earth wire (Green / Yellow) must be connected to system ground terminal as marked.

This option is configured and shipped as the default.
All equipment (pumps, blower and heater) runs on service line L1

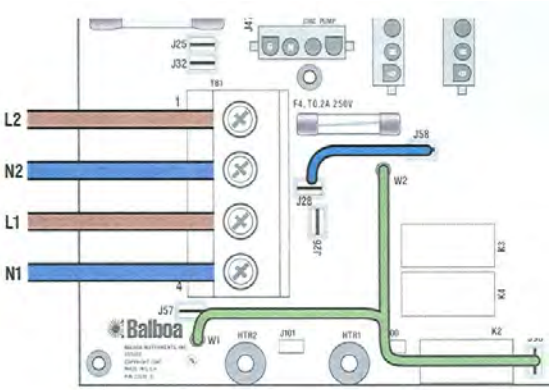

Dual Service,
TN and TT
Electrical Systems
(2 x 16 Amp)

5 Wires (2 Lines + 2 Neutrals + 1 Protective Earth)
Protective Earth wire (Green / Yellow) must be connected to system ground terminal as marked.

The heater runs on service line L1, while all other equipment, such as pumps and blowers, run on service line L2

Completely remove the white wire from J26 and J32.
Note: J32 and J25 are electrically identical. The white wire may be attached to either terminal before removal.

50 Hz SOUTH SEAS SINGLE/DUAL/THREE PHASE

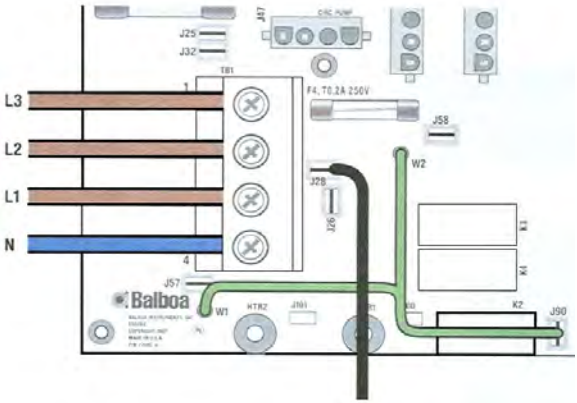

To an optional fuse-protected expansion board.

3-Phase Service, TN and TT Electrical Systems
(3 x 16 Amp)
5 Wires (3 Lines + 1 Neutral + 1 Protective Earth)
Protective Earth wire (Green / Yellow) must be connected to system ground terminal as marked.
IMPORTANT - Service MUST include a neutral wire, with a line neutral voltage of 230 VAC.
The heater runs on service line L1.
All main-board equipment run on service line L3
Additional equipment, such as expansion boards, run on service line L2
Completely remove the white wire from J26 and J32, or J25
Completely remove the blue wire from J28 and J58.
If an expansion board is installed, black wire must connect to J28 (Line L2) only.

50 Hz SOUTH SEAS SINGLE/DUAL/THREE PHASE

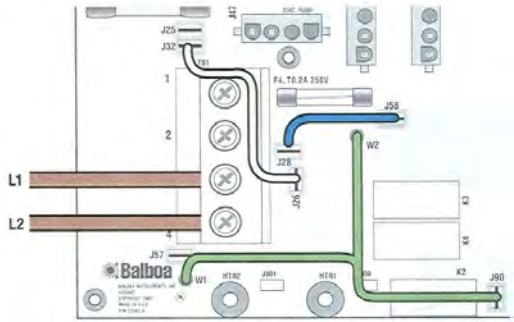

Single Service,
IT Electrical System
(No Neutral)

Line - Line voltage is 230 VAC (1 X 16 Amp or 1 X 32 Amp)
3 Wires (2 Lines + 1 Protective Earth)
Protective Earth wire (Green / Yellow) must be connected to system ground terminal as marked.

All equipment (pumps, blower and heater) runs on service line L1 with L2 acting as the return.

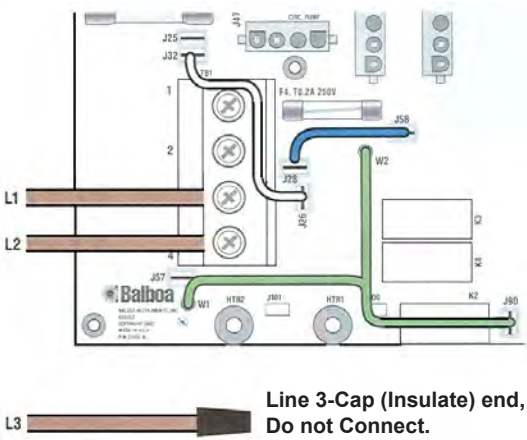

3 Phase Service,
IT Electrical System
(No Neutral)

Line 3-Cap (Insulate) end,
Do not Connect.

Line - Line voltage is 230 VAC
4 Wires (3 Lines + 1 Protective Earth)

Protective Earth wire (Green / Yellow) must be connected to system ground terminal as marked.

All equipment (pumps, blower and heater) runs on service line L1 with L2 acting as the return.

SPA START-UP

Please read each step of the Start-up section prior to doing the step.

SELECTING A LOCATION

In preparation for installing your new South Seas spa, you should ensure that your chosen location meets some minimum guidelines:

1) Place your spa on a surface that is large enough for the entire spa to fit. Consider the space needed to easily access equipment compartments and circuit breakers. Remember, all electronics must be kept dry.

2) The spa must be on a solid, level foundation. Recommended: 4- inch cement slab that has cured for at least 72 hours. Your warranty will be voided if the spa is not properly installed. Structural damage due to an improper foundation is not covered under warranty.

3) To avoid potential water damage to the skirt and frame, your spa should be placed on a site where it will not be in the way of water sprinklers.

4) OUTDOOR SPAS: Consider building codes, electrical and plumbing codes, desired proximity to house, wind and sun exposure, location of trees (falling leaves, shade), dressing area, landscaping and lighting when selecting a location.

5) INDOOR SPAS: Floor surface must have traction to prevent slipping when wet. A floor drain is optimum. As room humidity will increase because of the spa, provide ample ventilation to prevent dry rot, mildew and mold. Use materials that will withstand humidity. There may be a need for cross-ventilation fans and/or dehumidifiers. The spa chemicals may corrode some household metals. Provide ample room if servicing should be needed. Strong foundational support is vital, particularly if a second-story site is selected.

6) Ensure the equipment compartment is in a location where it will not be damaged by water drainage. Cover the equipment compartment with a heavy screen if rodents are a problem. Damage due to rodents is not covered under warranty.

7) Have the spa deck installed by a knowledgeable contractor to ensure proper support.

8). If the spa is placed on the ground, even for a short period of time, it must be supported by stones that are at least 2 inches thick and 12 inches square. A solid foundation is recommended as soon as possible.

INSPECTION

You will want to inspect your spa, prior to filling it up with water. Look for and remove any debris in the spa tub and in the filter. Verify that pump plugs are installed on the pumps and the pump unions are tight.

FILLING THE SPA WITH WATER

NOTE: DO NOT fill your spa with hot water straight out of your water heater or tap. This water may be as hot as 180º F and will cause damage to the surface and plumbing of the spa. This will void your warranty. Level the spa before filling.

1) Prepare to fill the tub by removing all debris.

2) Remove the filters from your spa (see Removing, Installing and Cleaning Filters, page 30)

3) Insert the hose in the area where the filter was located as shown in the picture below.

4) Fill the spa to the bottom of the pillows or about 6-8 inches from the top of the spa Note: DO NOT OVER-FILL YOUR TUB!

5) With the front panel off, verify there are no leaks at the pump union. Note: Pump unions can become loose during shipping. Verify that there are no leaks during filling of the spa.

SPA START-UP

TESTING THE GFCI BREAKER

NOTE: The electrical service panel for your spa should be equipped with a GFCI breaker. To avoid the risk of electrical shock, perform the following safety test before each use of your spa.

1) Make sure the power is turned on at the electrical service panel.

2) The spa must be on a solid, level foundation. Recommended: 4- inch cement slab that has cured for at least 72 hours. Your warranty will be voided if the spa is not properly installed. Structural damage due to an improper foundation is not covered under warranty.

3) To avoid potential water damage to the skirt and frame, your spa should be placed on a site where it will not be in the way of water sprinklers.

DANGER: RISK OF ELECTRICAL SHOCK

If the GFCI breaker fails to operate as described, there is a possibility of an electric shock if the spa is used. Shut off the power at the main electrical service panel until the source of the problem has been identified and corrected by a licensed electrician or qualified spa technician.

VS/GS SERIES CONTROL OPERATIONS

When your spa is first actuated, it will go into Priming mode which is indicated by “Pr”. This Priming mode will last for 5 minutes and then the spa will begin to heat the spa and maintain the water temperature in the Standard Mode.

LEGEND

JETS Activates the jets

LIGHT Activates the light

WARM Used to control the temp (increase)

COOL Used to control the temp (decrease)

When lit the heater is on

Used when changing modes between temperatures.

VS/GS SERIES CONTROL OPERATIONS

TEMP/SET (80°F - 104°F / 26°C - 40°C)

The start-up temperature is set to 100°F/37°C. The last measured temperature is constantly displayed on the LCD.

NOTE: The last measured spa temperature displayed is current only when the pump has been running for at least 2 minutes.

To display the set temperature, press the “Cool”

or “Warm” pad

once.

To change the set temperature, press the pad a second time before the LCD stops flashing. Each press of the “Cool”

or “Warm” pad will

continue to either lower or raise the set temperature respectively.

LIGHT/MODE/FREEZE PROTECTION

LIGHT

Press the “Light” button

to turn the light on and off. If

left on, the light automatically turns off after 4 hours.

MODE

The mode is changed by pressing the “Warm”

or “Cool” button,

then pressing the “Mode” button.

Standard Mode is programmed to maintain the desired temperature. Note that the last measured spa temperature is current only when the pump has been running for at least 2 minutes. “St” will be displayed momentarily when you switch into Standard Mode.

Economy Mode heats the spa to the set temperature only during filter cycles. “Ec” will display solid when temperature is not current, and will alternate when temperature is current.

Sleep Mode heats the spa to within 20°F/10°C of the set temperature only during filter cycles. “SL” will display solid when temperature is not current, and will alternate when temperature is current.

FREEZE PROTECTION

If the temperature sensors detect a drop to below 44°F/6.7°C within the heater, the pump will automatically activate to provide freeze protection. The equipment stays on until 4 minutes after the sensors detect that the spa temperature has risen to 45°F/7.2°C or higher. In cold climates, an additional freeze sensor may be added to protect against freeze conditions that may not be sensed by the standard sensors. Aux freeze sensor protection acts similiarly except with the temperature thresholds determined by the switch and without a 4-minute delay in turnoff. See your dealer for details.

JETS/PRESET FILTER CYCLES

JETS

Touch the “Jets”

button once to activate the pump for the jets. Touch the “Jets” button

again to turn off the pumps. If left running, the pumps will automatically turn off after 15 minutes.

PRESET FILTER CYCLES

The filter cycle begins 6 minutes after the spa is energized. The second filter cycle begins 12 hours later. Filter duration is programmable 2, 4, 6, or 8 hours for continuous filtration (Indicated by “FC”). The default filter time is 2 hours. To program, press “Warm” or

“Cool”

then “Jets”.

Press “Warm”

or “Cool”

to adjust. Press “Jets”

to exit programming.

DIAGNOSTIC MESSAGES

--

Temperature unknown.

After the pump has been running for 2 minutes, the temperature will be displayed

HH

“Overheat” The spa has shut down. One of the sensors has detected 118°F/48°C at the heater.

DO NOT ENTER THE WATER. Remove the spa cover and allow water to cool. Once the heater has cooled, reset by pushing any button. If spa does not reset, shut off the power to the spa and call your dealer or service organization.

OH

“Overheat”-The spa has shut down. One of the sensors has detected that the spa water is 110°F/43°C.

DO NOT ENTER THE WATER. Remove the spa cover and allow water to cool. At 107°F/42°C, the spa should automatically reset. If spa does not reset, shut off the power to the spa and call your dealer or service organization

IC

“Ice” - Potential freeze condition

No action required. The pump and blower will automatically activate regardless of spa status.

SA

Spa is shut down. The sensor that is plugged into the Sensor “A” jack is not working.

If the problem persists, contact your dealer or service organization. (May appear temporarily in an overheat situation and disappear when the heater cools.)

Sn

Sensors are out of balance. If alternating with spa temperature, it may just be a temporary condition. If flashing by itself, spa is shut down.

If the problem persists, contact your dealer or service organization.

HL

A significant difference between temperature sensors has been detected. This could indicate a flow problem.

Check water level in spa. Refill if necessary. If the water level is okay, make sure the pumps have been primed. If problem persists, contact your dealer or service organization.

DIAGNOSTIC MESSAGES

LF Persistent low flow problems. (Displays on the fifth occurrence of "***HFL***" message within 24 hours.) Heater is shut down, but other spa functions continue to run normally.
Follow action required for "***HFL***" message. Heating capability of the spa will not reset automatically; you may press any button to reset.

dr Possible inadequate water, poor flow, or air bubbles detected in the heater. Spa is shut down for 15 minutes.

Check water level in spa. Refill if necessary. If water level is okay, make sure the pumps have been primed. Press any button to reset, or this message will automatically reset within 15 minutes. If problem persists, contact your dealer or service organization.

dY Inadequate water detected in heater. (Displays on third occurrence of "dr" message.) Spa is shut down.
Follow action required for "dr" message. Spa will not automatically reset. Press any button to reset.

MAINTAINING YOUR SPA

PILLOW CARE

Clean the pillows with soapy water and a soft cloth when needed. Use a vinyl conditioner once a month. Remove pillows when doing chemical shock treatment.

JET CARE

We recommend that you clean your jets when you drain your spa.

1) Spray jet inserts with a mixture of 1 part vinegar to two parts warm water and let soak for 10-15 minutes. Periodically rotate the spinner nozzle to break up residue in the jets.

2) Soak jet inserts in a mixture of 1 part vinegar to two parts warm water for 2-3 hours. Periodically rotate the spinner nozzle to break up residue in the jets.

REMOVING, INSTALLING AND CLEANING FILTERS

These are the steps needed to successfully replace your filters. You should clean your filters every four months.

1) Turn off all power to your spa and remove the filter lid by lifting it out towards you.

2) Dispose of the used filter.

3) Set the new filter inside and place the filter cap on top.

4) You then rinse the filter with a garden hose and soak the filter in a mixture of one pint of filter cleaner with 2.5 gallons of water for at least 12 hours. The filter must be completely submerged.

WARNING: Power to your spa must be turned off prior to removing your filters. The suction at the filter is extremely strong and can cause injury if there is no filter. NEVER run your spa without the filters properly installed. Injury to person and damage to the equipment can occur. Any damage to equipment due to this circumstance will not be covered under warranty.

WINTERIZING YOUR SPA

It is not recommended that you drain your spa completely during freezing conditions. We recommend that you leave your spa full of water with the power on to keep the tub from freezing. If you decide to drain your spa during freezing conditions, contact your dealer for help. Contact your South Seas dealer before refilling a drained spa in freezing temperature.

WARNING: Damage to your spa caused by freezing is NOT covered under warranty. Please contact your local South Seas dealer to assist you in winterizing your spa.

REPLACING THE LIGHT BULB

1) Turn off the power at the main electrical service panel.

2) Remove front access panel.

3) Locate and remove the reflector by turning it counterclockwise untilfree from the surface-top view

4) Remove the bulb from the holder.

5) Replace with new bulb. Your spa dealer has these bulbs in stock.

6) Replace the reflector by screwing it clockwise back onto the light fitting.

7) Replace the front panel.
8) Turn power on at the main electrical service panel.

SPA CABINET CARE

Your spa comes standard with a KingWood cabinet. This cabinet requires no maintenance. You may wish to clean the cabinet with mild soap and water from time to time. If you elected to purchase your spa with a wood cabinet, this cabinet is stained and sealed with an oil based acrylic stain. The stain is formulated especially for spa cabinet and deck applications and is resistant to ultraviolet light damage caused by sun rays. It is also resistant to fungus and insect damage.

Your South Seas dealer carries this type of stain for your convenience, so call your dealer when you’re ready to re-stain your cabinet. You should re-stain your wood cabinet at least once a year, or more frequently depending on your environmental conditions.

1) Gently wash the cabinet with mild soap and water and allow to dry completely.

2) Moisten a rag with the stain you have purchased from your South Seas dealer.

3) Apply the stain on the entire cabinet surface, wiping off any excess stain as you are applying.

4) Allow stain to dry for a minimum of 24 hours before getting the cabinet wet.

NOTE: Do not apply any solid type finish such as shellac or varnish. After weathering, these types of finishes will crack and/or turn yellow. To refinish the wood, you will need to completely strip the finish before applying the new one. Use only the stain recommended by your South Seas dealer for refinishing your spa.

CLEANING YOUR SPA INTERIOR

It is important to clean the interior of your spa every time it is drained to help preserve the sheen of your spa's surface. However, it is important that you do not use any abrasive cleaners or strong chemicals. Your South Seas Spas authorized dealer will be able to supply you with the proper cleaning solution for your spa. After cleaning, make sure all residues are removed prior to filling the spa. This will help prevent sudsing and improper chemical balance.

COVER CARE

Cleaning of your spa cover is an important part of routine maintenance. Dirt acts as an abrasive to the vinyl topcoat, and can also cause wear to folds, seams, and stitching. Mildew growing on damp, dirty vinyl will begin to actually root in the fabric, accelerating failure. Follow this simple routine for cleaning, prior to application of viny protectant:

1) Rinse with cool water using a garden hose.

2) Spray with a gentle, non-foaming cleaner and wipe clean. Never use laundry detergent, abrasives, alcohols, dish soaps or harsh cleaners. These can actually remove some of the topcoat and cause premature vinyl failure.

3) For stubborn dirt, use a non-abrasive sponge.

4) Rinse again thoroughly with water and allow to dry.

5) Repeat monthly, or as needed.

MAINTAINING YOUR SPA

Your vinyl cover is affected by the UV in sunlight. Periodic treatment with a liquid protectant will extend the life of your spa. The wrong kind of protectant can be more harmful than no protectant at all. Keep any product away from your spa that is labeled “flammable,” that contains any type of oil, or that leaves a waxy coating on your cover (do not use armor-all on the cover).

Never stand or sit on the cover and never drag it over abrasive surfaces. Lift cover only by the handles provided.

NOTE: Your cover will hold up to 145 pounds. The covers are not intended to be walked on, but a child or pet stepping on the cover won’t break it.

CHEMICAL TREATMENT OF WATER

Water from your tap is fine for showers, bathing and drinking. However, in a contained recirculating system such as in a spa, water must be treated with chemicals. The main purpose of chemical treatment is to keep the water sanitary and to maintain a specific balance of the water. Proper balance ensures that the water will not cause irritation to the users or harm the spa’s components. Chemical treatment does have its limitations. When water evaporates, chemical residues are left behind.

As the levels of the residues combine with other types of residue, such as body oil and detergents, your water becomes increasingly difficult to maintain. Because of this residual effect, at some point it becomes easier and more cost-effective to drain, clean and refill your spa with new water. We recommend that the water be changed at least every six months. At this time you should also clean or replace your filters. If your spa has a frequent and/or heavy bather load, it may be necessary to drain and fill your spa more often.

WARNING: Spa damage due to improper chemicals is not covered under warranty.

ARTESIAN SOUTH SEAS SPAS WARRANTY

This section is a description of your warranty. Here you will find descriptions of what is covered under your South Seas Spa warranty and what can void your warranty. ***PLEASE READ THE WARRANTY THOROUGHLY.*** Please take a moment to register your warranty. You can register on line at http://www.southseasspas.com, click on owner login or you mail in the warranty registration card attached to this manual. For warranty outside USA and Canada, please refer to your countries Artesian Distributor.

LIFETIME STRUCTURE WARRANTY

South Seas Spas Class carry a liftetime structure warranty. The structure is defined as the fiberglass vessel below the exposed material finish. The manufacturer warrants the spa against loss of water due to a defect in the spa structure. In the event of a defect in the material and/or workmanship, the spa structure will be repaired or replaced at the discretion of the manufacturer. ***THIS WARRANTY IS GIVEN ONLY TO THE ORIGINAL OWNER, AND TERMINATES UPON TRANSFER OF OWNERSHIP. COMMERCIAL APPLICATIONS ARE EXCLUDED FROM THIS AND ALL WARRANTIES.***

If the spa structure is defective and must be replaced, it will be returned to the factory. The original, installed equipment (this includes the frame, skirt, and all equipment) will be reinstalled. If new equipment is desired, there will be additional charges to the customer. If the frame and/or skirt of the spa has been badly damaged, there will be additional charges to the spa owner for repairs or replacement. When a spa needs to be returned to the factory for repair, the cost of one way freight to the company will be at the spa owner's expense. The manufacturer will not pay for removal, installation, cranes, construction, de-construction, or any other cost associated with access, egress, or ingress, of the spa at the customer's home. The manufacturer reserves the right to an on-site inspection by its authorized representative. In the unlikely event a shell or spa must be replaced, all warranties (shell, surface, electrical and plumbing) date back to the original start date of the warranty. The warranty period starts either the day of delivery to the customer or eighteen (18) month from the date of manufacturing, whichever date comes first.

THREE YEAR SURFACE WARRANTY

The spa surface is described as the exposed material finish. The manufacturer warrants the spa surface to be free from defects in the material and workmanship, such as blistering, cracking, or delaminating, this does not cover micro-crazing, under normal use and maintenance for a period of three years from the original start date of the warranty.

ARTESIAN SOUTH SEAS SPAS WARRANTY

The warranty period starts either the day of delivery to the customer or eighteen (18) month from the date of manufacturing, whichever date comes first. ***THIS WARRANTY IS GIVEN ONLY TO THE ORIGINAL OWNER, AND TERMINATES UPON TRANSFER OF OWNERSHIP. COMMERCIAL APPLICATIONS ARE EXCLUDED FROM THIS AND ALL WARRANTIES.***

The spa must be set on a level solid surface that is sufficient to support the entire length and width of the spa. Standard building practices must be followed. Damage caused by failure to have a leveled and supported foundation under the spa is not covered under warranty. The manufacturer does not warrant problems associated with prolonged exposure to the sun and/or use of any sanitization or ozone system not approved by the manufacturer. Damage to the spa surface caused by leaving the spa uncovered and empty of water with direct sunlight exposure will terminate this warranty. Any alteration to any system, either electrical, plumbing, or mechanical, or over use of chemicals, or any other problems caused by external source are not covered under warranty. Other exclusions may apply.

Normally problems associated with material and workmanship can and will be repaired. If the spa surface is repaired, the repair is limited to the affected area only, and there is no guarantee against discoloration of fading. The decision to repair will be made by the manufacturer and its field representative after a review of the facts, pictures, or any other data presented by the dealer or customer. In all cases, pictures of the affected area and foundation or the spa must be provided before any decisions to repair or replace can be made. In the unlikely event a shell or spa must be replaced, all warranties (shell, surface, electrical and plumbing) date back to the original date of delivery. If it is determined that the surface is to be replaced, the same conditions and terms as outlined in the shell warranty will apply.

THREE YEAR ELECTRICAL WARRANTY

(i.e., pumps, equipment packs, heaters, topside, etc.)

The MANUFACTURER warrants all electrical equipment to be free from defect in material and workmanship for three-years from the original start date of the warranty. The warranty period starts either the day of delivery to the customer or eighteen (18) month from the date of manufacturing, whichever date comes first.

ARTESIAN SOUTH SEAS SPAS WARRANTY

THIS WARRANTY IS GIVEN ONLY TO THE ORIGINAL CONSUMER AND TERMINATES UPON TRANSFER OF OWNERSHIP. COMMERCIAL APPLICATIONS ARE EXCLUDED FROM THIS AND ALL WARRANTIES.

The stereo, speakers, L.E.D. lighting, and Ozone are not included in this warranty but are covered under a separate warranty. Damage caused by acts of nature, poor water chemistry, and/or improper maintenance will not be covered under this warranty. Alterations or replacements of components installed in the spa that are not purchased and/or approved by the MANUFACTURER, including incorrect wiring, will terminate the complete spa warranty.

THREE YEAR PLUMBING WARRANTY
The plumbing is described as all piping, jet bodies, valve bodies and air controls. The manufacturer warrants all plumbing for a period of three years from the original start date of of the warranty. The warranty period starts either the day of delivery to the customer or eighteen (18) months from the date of manufacturing, whichever date comes first. ***THIS WARRANTY IS GIVEN ONLY TO THE ORIGINAL OWNER, AND TERMINATES UPON TRANSFER OF OWNERSHIP. COMMERCIAL APPLICATIONS ARE EXCLUDED FROM THIS AND ALL WARRANTIES.***

Jet internals, valve handles, and such items are regular maintenance items. They are covered for the item only, labor is not covered for these items. Damage caused by weather, poor water chemistry, and/or improper maintenance will not be covered under this warranty

ONE YEAR CABINET WARRANTY
The spa cabinet is described as the outer material encasing the spa structure. The manufacturer warrants it to be free from defects in material and/or workmanship from the original start date of the warranty. The warranty period starts either the day of delivery to the customer or eighteen (18) month from the date of manufacturing, whichever date comes first. ***THIS WARRANTY IS GIVEN ONLY TO THE ORIGINAL OWNER, AND TERMINATES UPON TRANSFER OF OWNERSHIP. COMMERCIAL APPLICATIONS ARE EXCLUDED FROM THIS AND ALL WARRANTIES.***

This warranty does not cover normal darkening, staining, or aging. The spa cabinet requires care and maintenance by the consumer. Damage caused by weather, poor water chemistry, and/or improper maintenance will not be covered under this warranty.

OTHER ITEMS NOT COVERED IN THIS WARRANTY

Some items are not covered in this warranty. These items either have a different warranty, or are warranted through the manufacturer of that item.

STEREO AND STEREO COMPONENTS

The stereo and stereo components, including speakers, sub-woofer, stereo power supply, wire harness and remote control are covered for 30 days from the original start date of the warranty. The warranty period starts either the day of delivery to the customer or eighteen (18) month from the date of manufacturing, whichever date comes first. Please note: Warranty coverage for both parts and labor is covered for 30 days only. Parts, not labor, will be covered for one year from date of installation. This warranty does not cover damage to a stereo or stereo component from abuse, poor reception, or damage caused by putting a wet CD into the stereo. If a stereo is replaced under this warranty, the manufacturer reserves the right to replace the unit with another like unit, but not necessarily the same stereo manufacturer. No spa will be replaced for a failed stereo. The stereo does not affect the performance of the spa.

NOTE: For all operating instructions see the stereo manufacturer's owner's manual included with the spa.

OZONATOR

The ozonator is covered for one year from the original start of the warranty. The warranty period starts either the day of delivery to the customer or eighteen (18) months from the date of manufacturing, whichever date comes first.

SPA COVER

The spa cover manufacturer warrants the spa cover skin for one year from the original start date of the warranty. The warranty period starts either the day of delivery to the customer or eighteen (18) months from the date of manufacturing, whichever date comes first. Do not return the spa cover to the manufacturer. This will delay the replacement or repair of the cover.

ARTESIAN SOUTH SEAS SPAS WARRANTY

The spa manufacturer is not responsible for lost covers.

LIGHTING
The lighting is guaranteed to work upon delivery. There is no warranty covering the lighting.

PERFORMANCE
In the event of any defect covered by this LIMITED warranty, a May Manufacturing LLC, authorized agent will correct such defect within the terms and conditions contained herein. There will be no charge for parts or labor within the above terms. However, travel charges that occur will not be covered under terms and conditions by the warranty. If it is determined by May Manufacturing LLC that the repair of the product is not feasible, a replacement spa equal to the value of the original purchase price will be provided. Cost for removal of the defective spa and delivery and installation of the replacement spa is the responsibility of the homeowner and will not under any circumstances be covered by May Manufacturing LLC.

LIMITATIONS
This warranty is void if this Artesian Spa has been subjected to alteration, misuse, or repairs have been performed by anyone other than an authorized agent of May Manufacturing LLC. Misuse or abuse is defined as: use of the spa in a nonresidential application, water temperature outside the range of 32 degrees F to 110 degrees F, damage caused by clogged or dirty filter cartridges, damage to the spa from an absence of a hard cover, damage to components from improper pH, use of any type of acid, or from chemical imbalance. ACTS OF NATURE are not covered under this warranty.
Note: Warranty on 50Hz spas excludes labor.
(Outside US and Canada)

DISCLAIMER
May Manufacturing LLC, or its agent shall not be liable for any injury, cost or other damage, whether incidential or consequential, arising out of any defect covered by the LIMITED WARRANTY. The liability of May Manufacturing LLC under this LIMITED WARRANTY shall not exceed the original amount paid for the spa.

LEGAL REMEDIES
This LIMITED WARRANTY gives specific rights, and other rights that may apply and will vary from state to state.

ARTESIAN SOUTH SEAS SPAS WARRANTY

WHAT IS NOT COVERED UNDER YOUR WARRANTY

The following is a general overview of non-warranty items and work. This is not an all-inclusive list.

Diagnosis of Spa Problems
Fuses
Light Bulbs of Any Kind
Removing a Spa from a Structure
Pillows
Filters
Chemical Misuse / Damage
Filter Lids
Any Part not Purchased from South Seas Spas
Jet Inserts
Valve Handles
Pump Seals
Draining and filling the Spa
Acts of Nature
Travel Charges
Cabinet Screws
Incorrect Wiring
Shipping Charges

THIS WARRANTY IS GIVEN ONLY TO THE ORIGINAL OWNER, AND TERMINATES UPON TRANSFER OF OWNERSHIP. COMMERCIAL APPLICATIONS ARE EXCLUDED FROM THIS AND ALL WARRANTIES.

Any alteration of the spa that has not been pre-authorized by the manufacturer will void all warranties. If the manufacturer approves an alteration, verify that this alteration is covered under warranty. Damage caused by moving a spa that is blocked in or that has been recessed, along with additional charges for labor, is not covered by this warranty.

_____

_____

_____

Please do not send products or other correspondence to the address below.

Place Stamp Here

MAY MANUFACTURING,LLC
Attn: Customer Care Department
4720 N. Lamb Blvd.
Las Vegas, NV 89115

SPA & WARRANTY REGISTRATION

Activate Product Warranty & Download Owner's Manuals

Please activate your warranty and register your spa by mailing in this reply card, or go online at www.SouthSeasSpas.com and click SUPPORT then "click Here to Register Your Spa".

(Serial # is required below and can be located on the bottom kick plate of the spa, or can be found within the cabinet next to the equipment on a white placard attached to the frame.)

Name_____Email_____

Address_____

City_____ State _____ Zip_____

Phone Number_____

Date of Installation_____ Spa Serial Number (required)_____

Spa Model _____

Your Dealers Name and Location_____

Optional Questions:

What other spa brands did you consider buying?_____

How many people are in your household?_____

What is your age bracket? 25-30 ☐ 31-40 ☐ 41-50 ☐ 51-60 ☐ 61-70 ☐ 71+ ☐

What is your reason for purchasing a spa? ☐ Health Benefits ☐ Stress ☐ Relief ☐ Relaxation

Other: _____

South Seas Spas

4720 N. Lamb Blvd.
Las Vegas, Nevada 89115
www.SouthSeasSpas.com

© 2017 Artesian Spas (May Manufacturing, LLC) | 11-0099-11 Rev_R012517